London Electronics Ltd
www.london-electronics.com help@london-electronics.com Tel +44 1767 626444 Fax +44 1767 626446

Pica-T Panel meter

Description:
A compact 4 digit temperature meter with wide-range power supply, for PT100, type T,J or K

Input Signals:

RTD	3 wire PT100
T/couple	Type T, J or K

Accuracy

PT100 1.0	+/-0.2%r +/-1C or +/-2F
PT100 0.1	+/-0.2%r +/-0.4C or +/-0.7F
TC T,J,K	+/-0.4%r +/-2C or +/-4F

Power:

PICA-P	85-265 VAC Fuse 100mA T
PICA-P6	11 to 70 VDC Fuse 500mA T

Display:

PT100 1.0	-200 to +800C / -328 to +1472F
PT100 0.1	-100.0 to +200.0C / -148 to + 392.0F
TC Type T	-200 to +400C / -328 to +752F
TC Type J	-50 to +850C / -58 to +1562F
TC Type K	-50 to +1250C / -58 to +2282F
Update	4 per second
Overflow	Displays OvE
CJ tempco	+/-100ppm/DegC
PT100 exc.	1.3mA DC
PT100 R_{max}	Leads to be less than 40 Ohms

Environmental:

Temp. Op.	-10 to +60 Deg. C
Storage	-25 to +85 Deg. C
Humidity	Less than 95%, non condensing
Front Seal	IP65

Dimensions:

Bezel	24mm high x 48mm wide
Cutout	22mm wide x 45mm high
Depth	70mm behind panel
Weight	50 grammes

EMC and safety guide:
Install a power-circuit breaking device, within easy reach of the operator.

Install in a sealed enclosure, where power is removed if the enclosure is opened.

To guarantee electromagnetic compatibility, you must follow the following advice...

Power supply cables must be routed separately to signal cables.

Use shielded wiring for the signal input, and connect the shield to ground / earth at the meter end only.

Cable cross-sectional area should be at least 0.25mm^2

Connections:
These meters have detachable plug-in connectors. Wires are held in place with spring clamps. A special displacement tool is included to help you connect your wiring to the clamps.

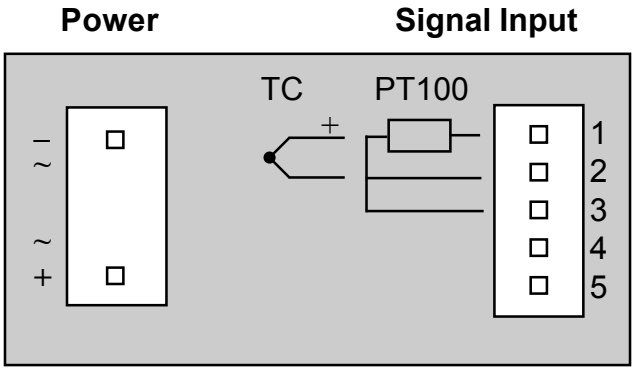

Notes:

Copyright London Electronics Ltd.

London Electronics Ltd
www.london-electronics.com help@london-electronics.com Tel +44 1767 626444 Fax +44 1767 626446

London Electronics Ltd
www.london-electronics.com help@london-electronics.com Tel +44 1767 626444 Fax +44 1767 626446

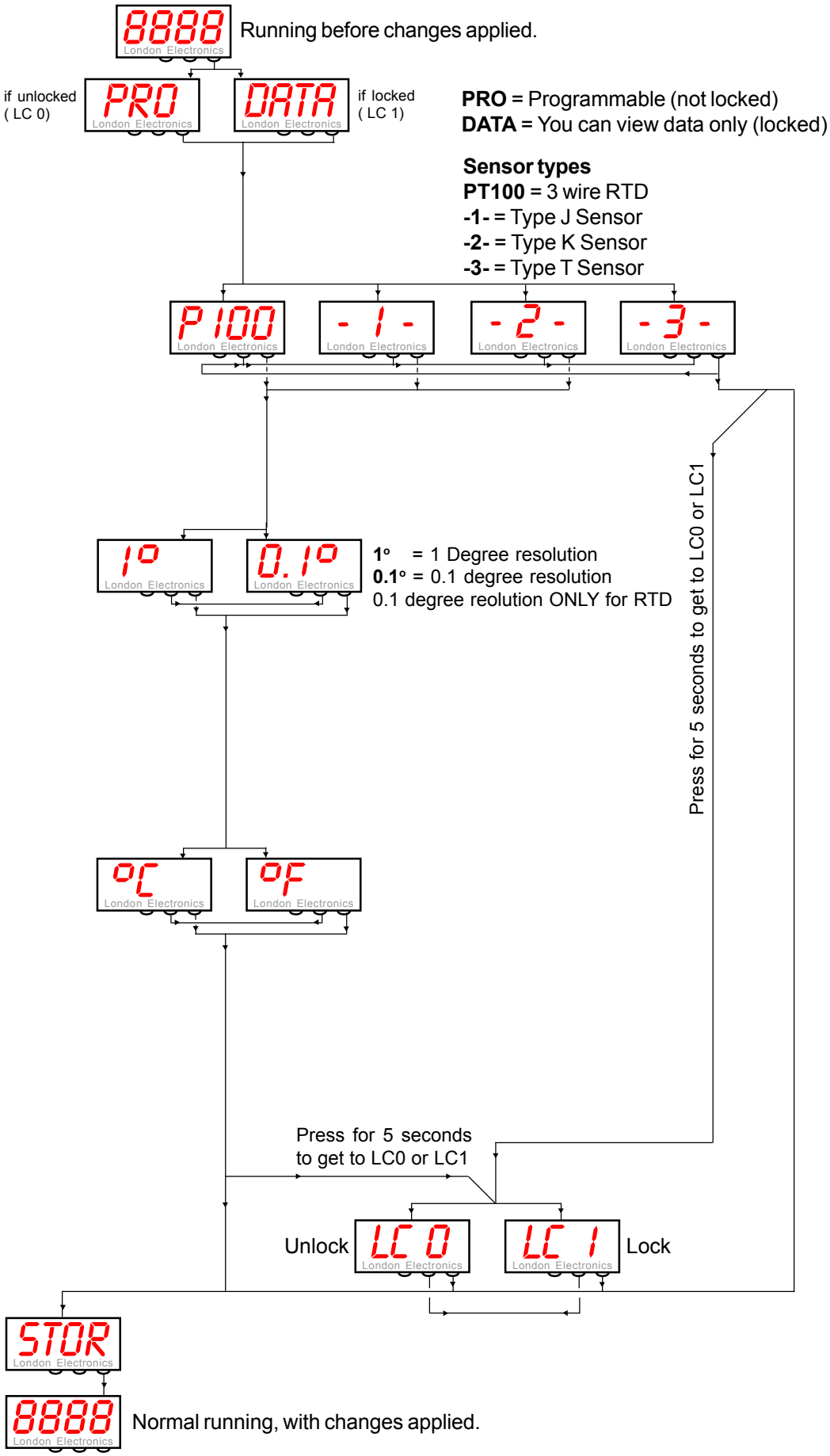

Copyright London Electronics Ltd.

London Electronics Ltd
www.london-electronics.com help@london-electronics.com Tel +44 1767 626444 Fax +44 1767 626446